REVISIONS			
REV.	DESCRIPTION	DATE	APPROVED
01	PROTOTYPE RELEASE	1/26/2010	
02	SEE DRAWINGS FOR EACH ITEM	4/13/2010	
03	CREATED SLOT OPENING FOR DIFFERENTIAL BOARD,MOVED CONTROLS TO OUTSIDE, CHG TO REV 03	10/22/2012	SRS
04	MOVED SGL D HOLE, ADDED 5/16 HOLE TO REAR COVER	11/5/2012	SRS

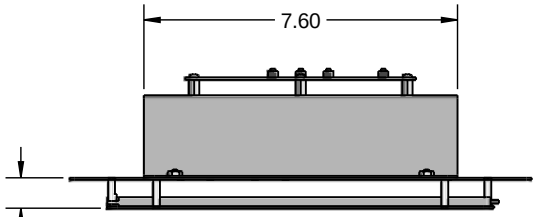

TOP VIEW

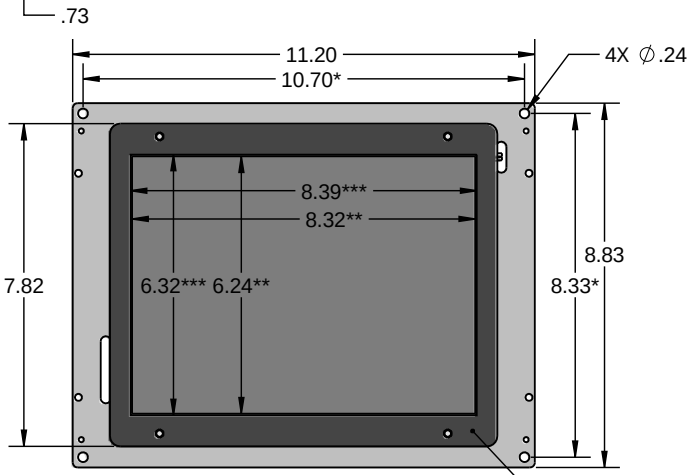

FRONT VIEW

OPTIONAL BEZEL

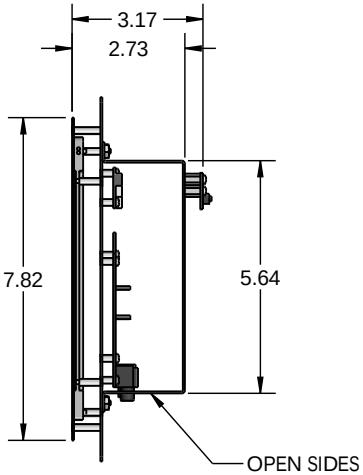

OPEN SIDES

SIDE VIEW

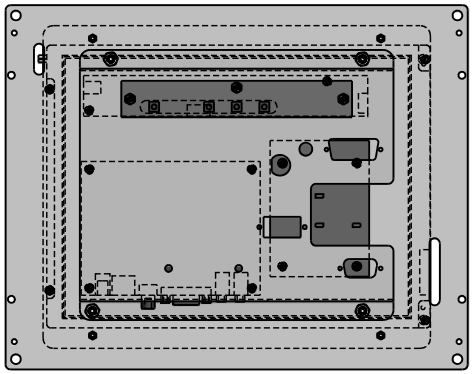

REAR VIEW

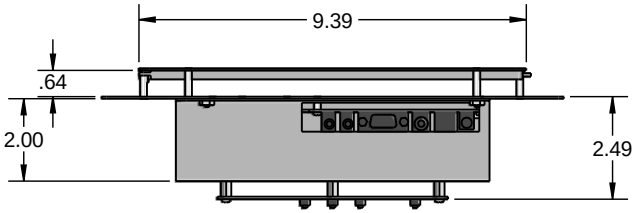

BOTTOM VIEW

NOTES:
*EXISTING CHASSIS MOUNTING HOLES
**VIEWING AREA
***BEZEL OPENING

PROPRIETARY AND CONFIDENTIAL
THE INFORMATION CONTAINED IN THIS DRAWING IS THE SOLE PROPERTY OF DYNAMIC DISPLAYS, INC. ANY REPRODUCTION IN PART OR AS A WHOLE WITHOUT THE WRITTEN PERMISSION OF DYNAMIC DISPLAYS, INC. IS PROHIBITED.

NEXT ASSY	USED ON
APPLICATION	

UNLESS OTHERWISE SPECIFIED:
DIMENSIONS ARE IN INCHES
TOLERANCES:
FRACTIONAL ±
ANGULAR: MACH ± BEND ±.5°
TWO PLACE DECIMAL ±.020
THREE PLACE DECIMAL ±.010
INTERPRET GEOMETRIC TOLERANCING PER:
MATERIAL
FINISH
DO NOT SCALE DRAWING

	NAME	DATE
DRAWN	SRS	
CHECKED		
ENG APPR.		
MFG APPR.		
Q.A.		

COMMENTS:

Dynamic Displays, Inc.

TITLE:
OUTLINE DWG,
10.4" RETOROFIT/12" CRT

SIZE	DWG. NO.	REV
B	0014125	04

SCALE: 1:3 | WEIGHT: | SHEET 1 OF 1