REVISIONS				
ZONE	REV.	DESCRIPTION	DATE	APPROVED
	01	INITIAL RELEASE	09/26/2005	
	02	KEYPAD REMOVED, .50 THICKER	12/8/2005	
	03	LOCATION FOR FRONT CONTROL MOVED.	1/16/2006	

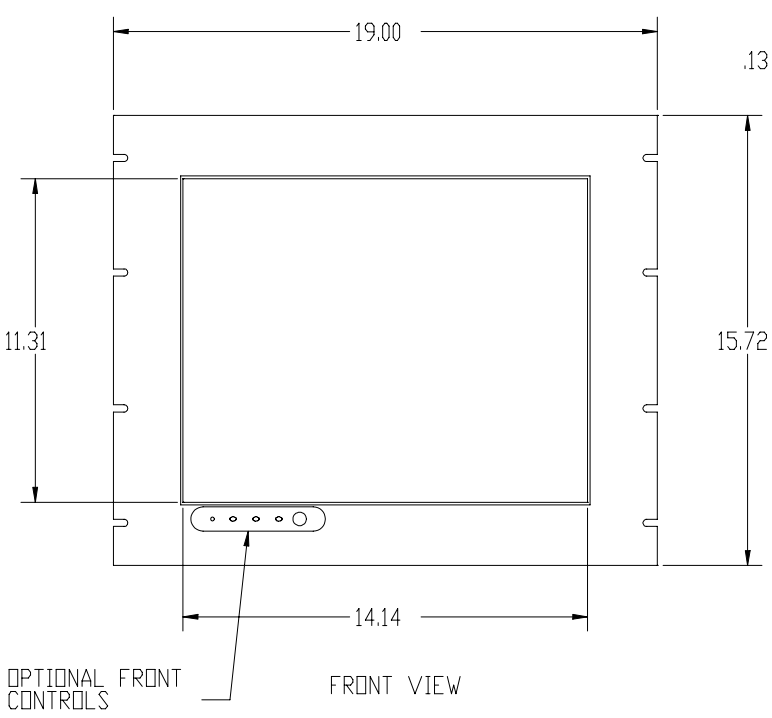

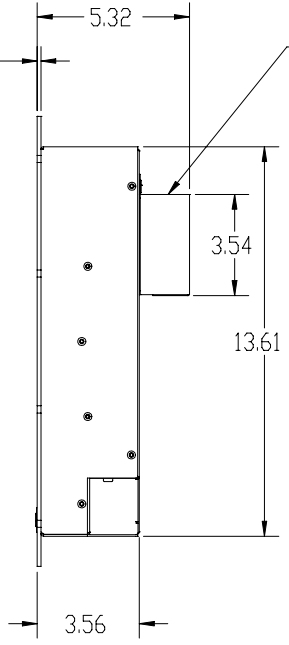

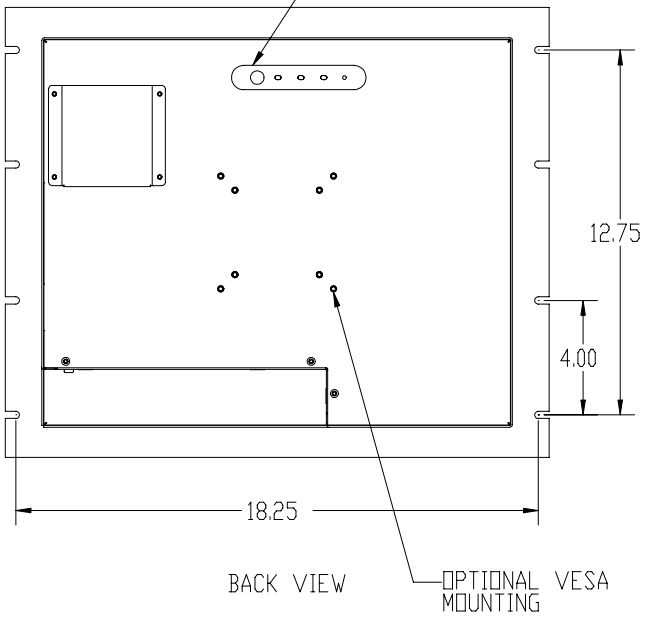

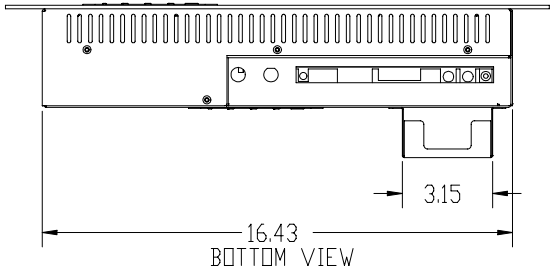

PROPRIETARY AND CONFIDENTIAL

THE INFORMATION CONTAINED IN THIS DRAWING IS THE SOLE PROPERTY OF DYNAMIC DISPLAYS, INC. ANY REPRODUCTION IN PART OR AS A WHOLE WITHOUT THE WRITTEN PERMISSION OF DYNAMIC DISPLAYS, INC. IS PROHIBITED.

NEXT ASSY	USED ON
APPLICATION	

UNLESS OTHERWISE SPECIFIED
DIMENSIONS ARE IN INCHES
TOLERANCES:
FRACTIONAL ±
ANGULAR: MACH ± BEND ±.5°
TWO PLACE DECIMAL ± .020
THREE PLACE DECIMAL ± .010
INTERPRET GEOMETRIC TOLERANCING PER:
MATERIAL X
FINISH X
DO NOT SCALE DRAWING

	NAME	DATE
DRAWN	ARJ	9/26/05
CHECKED		
ENG APPR.		
MFG APPR.		
Q.A.		
COMMENTS:		

Dynamic Displays, Inc.

TITLE:
OUTLINE DRAWING
18" FLAT PANEL
RACK MOUNT

SIZE	DWG. NO.	REV
B	0014094	03

SCALE: 1:2 SHEET1 OF 1